ELBURG YACHTING®

international yachtbrokers

- Appr. 16.90 x 4.75 x 1.30 m
- Van den Hoven Jachtbouw
- Van den Hoven Jachtbouw
- 2009
- B
- 1 x 210 pk Vetus Deutz DTA 66
- 3 x
- On request
- Sold under condition
- € 495.000,-

Gegevens worden geacht juist te zijn, doch worden niet gegarandeerd. - Whilst every care has been taken in the preparation of the particulars, their correctness is not guarenteed.

J.P. Broekhovenstraat 37
8081 HB Elburg
The Netherlands

Reference number
B26024442

info@elburgyachting.nl
www.elburgyachting.nl
+31 525 68 68 68

ELBURG YACHTING®
international yachtbrokers

Well-equipped Van den Hoven Exclusive 1600 with a fixed wheelhouse. Eye-catching features of this motor yacht include the 3-cabin layout, spacious and bright saloon with adjoining wheelhouse, comprehensive technical equipment including hydraulic bow and stern thrusters and fin stabilizers for comfortable cruising in rougher waters, underfloor heating throughout the entire yacht and air conditioning in the aft cabin, as well as a 12 kVA generator for fully self-sufficient cruising.
In 2024, both the hull and superstructure were provided with a completely new paint system, during which the windows and hatches were removed to ensure a thorough and high-quality finish.
This Van den Hoven 1600 Exclusive is equipped with: bimini top over the aft deck, integrated aft deck bench with removable seat cushions, two semi-circular stairways to the aft deck, removable ladder for the swimming platform and access to the side deck, exterior lighting, double stainless-steel railing with stainless-steel cap rail, stainless-steel fender holders on the foredeck, electrically operated sliding roof in the wheelhouse with insect screen and blackout blind + 2 x sliding windows with double glazing, three-part opening aft doors, luxury fixed helm seat, Simrad IS20 rudder position indicator, bow and rear-view cameras, searchlight, both analogue and digital engine information, Mastervolt Mass inverter/charger control, insect screen door in the wheelhouse, storage compartment in the galley floor, Bosch dishwasher, Miele washer/dryer combination, tanks with inspection hatches, double Separ fuel filters, double hydraulic pump mounted on the main engine, double sea strainers with shut-off valves, Hydronautica remote control for the bow and stern thrusters and engine controls, additional sound insulation by means of vibration-damping panels, granite worktops in the galley and bathrooms, and a hydraulically folding mast.
The yacht can be viewed by appointment in the Berlin area, Germany.
For questions and/or to make an appointment, you are welcome at Elburg Yachting 7 days a week.

Registered Yachtbroker E.M.C.I.

LID VAN DE NBMS NEDERLANDSE BOND VAN MAKELAARS IN SCHEPEN

ELBURG YACHTING®
international yachtbrokers

Gegevens worden geacht juist te zijn, doch worden niet gegarandeerd. - Whilst every care has been taken in the preparation of the particulars, their correctness is not guarenteed.

J.P. Broekhovenstraat 37
8081 HB Elburg
The Netherlands

Reference number
B26024442

info@elburgyachting.nl
www.elburgyachting.nl
+31 525 68 68 68

ELBURG YACHTING®
international yachtbrokers

Material hull	Steel – (paint system renewed in 2024)
Material superstructure	Steel – (paint system renewed in 2024)
Material deck	Full teak all around
Hull shape	Chine hull + protected rudder + Vetus hydraulic stabilizers
Displacement	Appr. 31 Tons
Steering position(s)	1 x hydraulic
Davits	N.a.
Bathing platform	Integrated with teak + stainless steel bathing ladder
Anchor winch	Hydraulic winch
Windowframes	Gebo windows with double glass
Interior	Cherry ship interior
Berth(s)	6 x fixed (1 x 2 pers. french bed in aft cabin + 2 x 1 pers. bunk bed in PS cabin + 2 x 1 pers. V-bed in front cabin)
Dinette	2 x (1 x saloon + 1 x aft deck)
Toilet	2 x electric
Shower	2 x in own cabin + outside shower on bathingplaform
Water capacity	Appr. 1000 litres
Holding tank	Appr. 350 litres
Hot water system	Via Kabola tap function
Heating system	Kabola B17 Tap by underfloor heating + airco in aft cabin
Cooking system	4-zone electric
Microwave/oven	Combi grill / microwave
Fridge	1 x fridge in wheelhouse + 1 x fridge / 1 x freezer in galley
Compass	Via plotter
Log	Simrad IS20
Echosounder	Simrad IS20
VHF	Simrad RS81
Radar	N.a.
Autopilot	Simrad AP25
G.P.S.	Simrad
Plotter	Raymarine (2024)
Engine hours	Appr. 1260 hours
Fuel capacity	Appr. 1200 litres (main engine) + appr. 800 litres (generator/heating)
Gear box	ZF Hydraulic + Aquadrive + EMC
Bow thruster	Hydraulic 2 speeds with hold function + Hydronautica remote
Stern thruster	Hydraulisch 2-standen met hold functie + Hydronautica afstandsbediening
Electricity	12 + 24 + 230 Volt
Generator	Mastervolt Whisper 12 Ultra
Shorepower	Present + shore cable
Inverter	Mastervolt Combi 24V / 4000W / 120A
Battery charger	Mastervolt Combi 24V / 4000W / 120A + Mastervolt Chargermaster 24V / 100Amp
Batteries	Appr. 11 x (8 x service + 2 x start + 1 x generator)

Gegevens worden geacht juist te zijn, doch worden niet gegarandeerd. - Whilst every care has been taken in the preparation of the particulars, their correctness is not guarenteed.

J.P. Broekhovenstraat 37
8081 HB Elburg
The Netherlands

Reference number
B26024442

info@elburgyachting.nl
www.elburgyachting.nl
+31 525 68 68 68

ELBURG YACHTING®

international yachtbrokers

Gegevens worden geacht juist te zijn, doch worden niet gegarandeerd. - Whilst every care has been taken in the preparation of the particulars, their correctness is not guarenteed.

J.P. Broekhovenstraat 37
8081 HB Elburg
The Netherlands

Reference number
B26024442

info@elburgyachting.nl
www.elburgyachting.nl
+31 525 68 68 68

ELBURG YACHTING®

international yachtbrokers

Gegevens worden geacht juist te zijn, doch worden niet gegarandeerd. - Whilst every care has been taken in the preparation of the particulars, their correctness is not guarenteed.

J.P. Broekhovenstraat 37
8081 HB Elburg
The Netherlands

Reference number
B26024442

info@elburgyachting.nl
www.elburgyachting.nl
+31 525 68 68 68

ELBURG YACHTING®

international yachtbrokers

Gegevens worden geacht juist te zijn, doch worden niet gegarandeerd. - Whilst every care has been taken in the preparation of the particulars, their correctness is not guarenteed.

J.P. Broekhovenstraat 37
8081 HB Elburg
The Netherlands

Reference number
B26024442

info@elburgyachting.nl
www.elburgyachting.nl
+31 525 68 68 68

ELBURG YACHTING®

international yachtbrokers

Gegevens worden geacht juist te zijn, doch worden niet gegarandeerd. - Whilst every care has been taken in the preparation of the particulars, their correctness is not guarenteed.

J.P. Broekhovenstraat 37
8081 HB Elburg
The Netherlands

Reference number
B26024442

info@elburgyachting.nl
www.elburgyachting.nl
+31 525 68 68 68

ELBURG YACHTING®

international yachtbrokers

Gegevens worden geacht juist te zijn, doch worden niet gegarandeerd. - Whilst every care has been taken in the preparation of the particulars, their correctness is not guarenteed.

J.P. Broekhovenstraat 37
8081 HB Elburg
The Netherlands

Reference number
B26024442

info@elburgyachting.nl
www.elburgyachting.nl
+31 525 68 68 68

ELBURG YACHTING®

international yachtbrokers

Gegevens worden geacht juist te zijn, doch worden niet gegarandeerd. - Whilst every care has been taken in the preparation of the particulars, their correctness is not guarenteed.

J.P. Broekhovenstraat 37
8081 HB Elburg
The Netherlands

Reference number
B26024442

info@elburgyachting.nl
www.elburgyachting.nl
+31 525 68 68 68

ELBURG YACHTING®

international yachtbrokers

Gegevens worden geacht juist te zijn, doch worden niet gegarandeerd. - Whilst every care has been taken in the preparation of the particulars, their correctness is not guarenteed.

J.P. Broekhovenstraat 37
8081 HB Elburg
The Netherlands

Reference number
B26024442

info@elburgyachting.nl
www.elburgyachting.nl
+31 525 68 68 68

ELBURG YACHTING®

international yachtbrokers

Gegevens worden geacht juist te zijn, doch worden niet gegarandeerd. - Whilst every care has been taken in the preparation of the particulars, their correctness is not guarenteed.

J.P. Broekhovenstraat 37
8081 HB Elburg
The Netherlands

Reference number
B26024442

info@elburgyachting.nl
www.elburgyachting.nl
+31 525 68 68 68

ELBURG YACHTING®

international yachtbrokers

Gegevens worden geacht juist te zijn, doch worden niet gegarandeerd. - Whilst every care has been taken in the preparation of the particulars, their correctness is not guarenteed.

J.P. Broekhovenstraat 37
8081 HB Elburg
The Netherlands

Reference number
B26024442

info@elburgyachting.nl
www.elburgyachting.nl
+31 525 68 68 68

ELBURG YACHTING®
international yachtbrokers

Gegevens worden geacht juist te zijn, doch worden niet gegarandeerd. - Whilst every care has been taken in the preparation of the particulars, their correctness is not guarenteed.

J.P. Broekhovenstraat 37
8081 HB Elburg
The Netherlands

Reference number
B26024442

info@elburgyachting.nl
www.elburgyachting.nl
+31 525 68 68 68

ELBURG YACHTING®

international yachtbrokers

Gegevens worden geacht juist te zijn, doch worden niet gegarandeerd. - Whilst every care has been taken in the preparation of the particulars, their correctness is not guarenteed.

J.P. Broekhovenstraat 37
8081 HB Elburg
The Netherlands

Reference number
B26024442

info@elburgyachting.nl
www.elburgyachting.nl
+31 525 68 68 68

ELBURG YACHTING®

international yachtbrokers

Gegevens worden geacht juist te zijn, doch worden niet gegarandeerd. - Whilst every care has been taken in the preparation of the particulars, their correctness is not guarenteed.

J.P. Broekhovenstraat 37
8081 HB Elburg
The Netherlands

Reference number
B26024442

info@elburgyachting.nl
www.elburgyachting.nl
+31 525 68 68 68

ELBURG YACHTING®

international yachtbrokers

Gegevens worden geacht juist te zijn, doch worden niet gegarandeerd. - Whilst every care has been taken in the preparation of the particulars, their correctness is not guarenteed.

J.P. Broekhovenstraat 37
8081 HB Elburg
The Netherlands

Reference number
B26024442

info@elburgyachting.nl
www.elburgyachting.nl
+31 525 68 68 68

ELBURG YACHTING®
international yachtbrokers

Gegevens worden geacht juist te zijn, doch worden niet gegarandeerd. - Whilst every care has been taken in the preparation of the particulars, their correctness is not guarenteed.

J.P. Broekhovenstraat 37
8081 HB Elburg
The Netherlands

Reference number
B26024442

info@elburgyachting.nl
www.elburgyachting.nl
+31 525 68 68 68

ELBURG YACHTING®

international yachtbrokers

Gegevens worden geacht juist te zijn, doch worden niet gegarandeerd. - Whilst every care has been taken in the preparation of the particulars, their correctness is not guarenteed.

J.P. Broekhovenstraat 37
8081 HB Elburg
The Netherlands

Reference number
B26024442

info@elburgyachting.nl
www.elburgyachting.nl
+31 525 68 68 68

ELBURG YACHTING®

international yachtbrokers

Gegevens worden geacht juist te zijn, doch worden niet gegarandeerd. - Whilst every care has been taken in the preparation of the particulars, their correctness is not guarenteed.

J.P. Broekhovenstraat 37
8081 HB Elburg
The Netherlands

Reference number
B26024442

info@elburgyachting.nl
www.elburgyachting.nl
+31 525 68 68 68

ELBURG YACHTING®

international yachtbrokers

Gegevens worden geacht juist te zijn, doch worden niet gegarandeerd. - Whilst every care has been taken in the preparation of the particulars, their correctness is not guarenteed.

J.P. Broekhovenstraat 37
8081 HB Elburg
The Netherlands

Reference number
B26024442

info@elburgyachting.nl
www.elburgyachting.nl
+31 525 68 68 68

ELBURG YACHTING®
international yachtbrokers

Gegevens worden geacht juist te zijn, doch worden niet gegarandeerd. - Whilst every care has been taken in the preparation of the particulars, their correctness is not guarenteed.

J.P. Broekhovenstraat 37
8081 HB Elburg
The Netherlands

Reference number
B26024442

info@elburgyachting.nl
www.elburgyachting.nl
+31 525 68 68 68

ELBURG YACHTING®

international yachtbrokers

Gegevens worden geacht juist te zijn, doch worden niet gegarandeerd. - Whilst every care has been taken in the preparation of the particulars, their correctness is not guarenteed.

J.P. Broekhovenstraat 37
8081 HB Elburg
The Netherlands

Reference number
B26024442

info@elburgyachting.nl
www.elburgyachting.nl
+31 525 68 68 68

ELBURG YACHTING®
international yachtbrokers

Gegevens worden geacht juist te zijn, doch worden niet gegarandeerd. - Whilst every care has been taken in the preparation of the particulars, their correctness is not guarenteed.

J.P. Broekhovenstraat 37
8081 HB Elburg
The Netherlands

Reference number
B26024442

info@elburgyachting.nl
www.elburgyachting.nl
+31 525 68 68 68

ELBURG YACHTING®
international yachtbrokers

Gegevens worden geacht juist te zijn, doch worden niet gegarandeerd. - Whilst every care has been taken in the preparation of the particulars, their correctness is not guarenteed.

J.P. Broekhovenstraat 37
8081 HB Elburg
The Netherlands

Reference number
B26024442

info@elburgyachting.nl
www.elburgyachting.nl
+31 525 68 68 68

ELBURG YACHTING®
international yachtbrokers

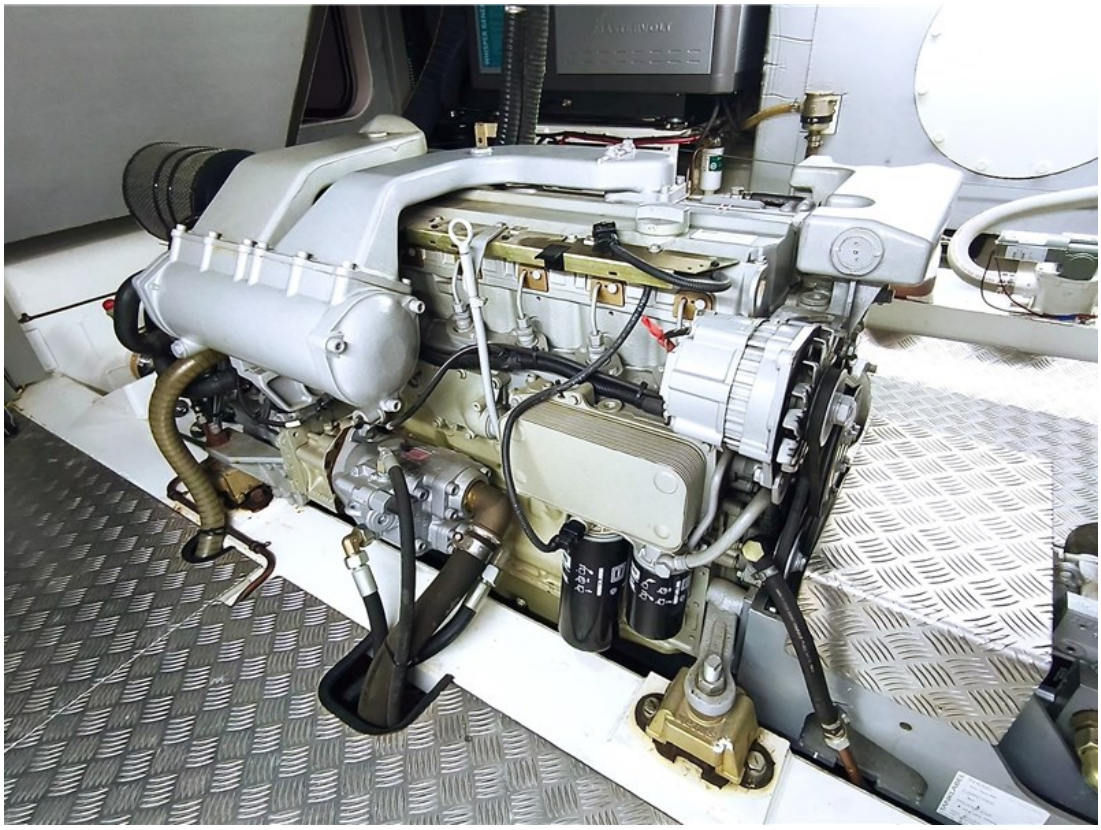

Gegevens worden geacht juist te zijn, doch worden niet gegarandeerd. - Whilst every care has been taken in the preparation of the particulars, their correctness is not guarenteed.

J.P. Broekhovenstraat 37
8081 HB Elburg
The Netherlands

Reference number
B26024442

info@elburgyachting.nl
www.elburgyachting.nl
+31 525 68 68 68

ELBURG YACHTING®
international yachtbrokers

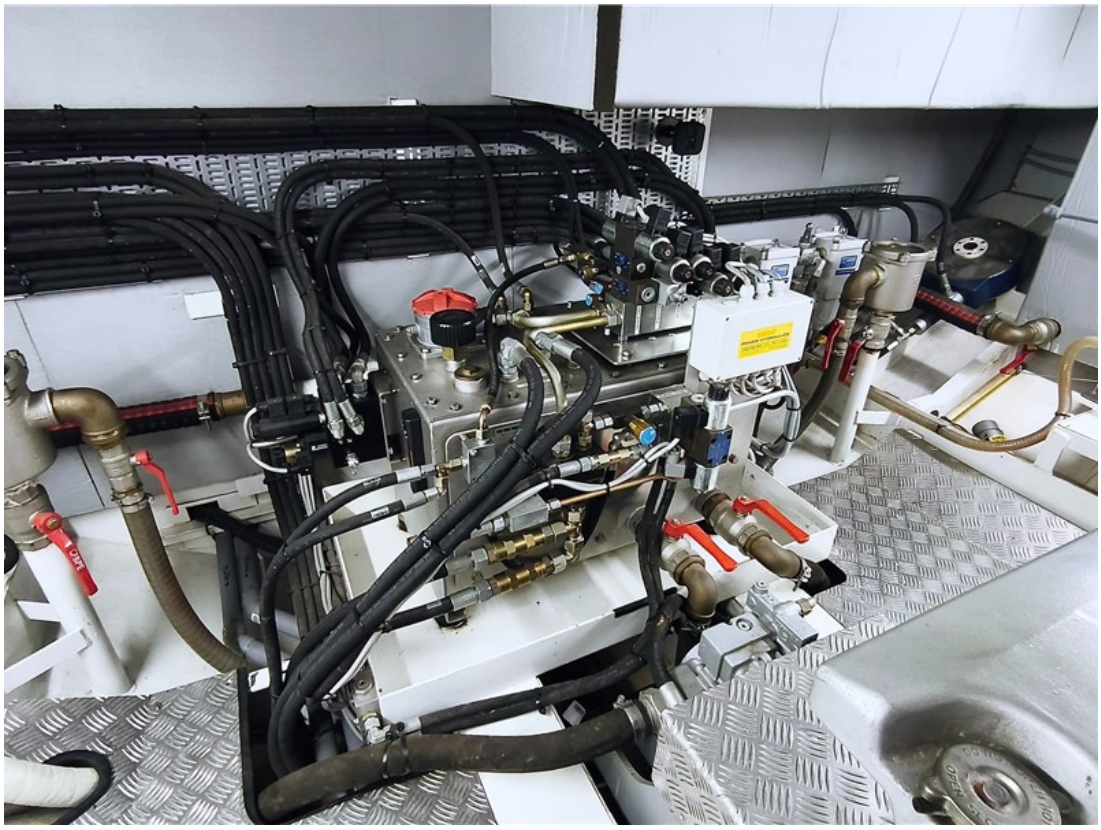

Gegevens worden geacht juist te zijn, doch worden niet gegarandeerd. - Whilst every care has been taken in the preparation of the particulars, their correctness is not guarenteed.

J.P. Broekhovenstraat 37
8081 HB Elburg
The Netherlands

Reference number
B26024442

info@elburgyachting.nl
www.elburgyachting.nl
+31 525 68 68 68

ELBURG YACHTING®
international yachtbrokers

Gegevens worden geacht juist te zijn, doch worden niet gegarandeerd. - Whilst every care has been taken in the preparation of the particulars, their correctness is not guarenteed.

J.P. Broekhovenstraat 37
8081 HB Elburg
The Netherlands

Reference number
B26024442

info@elburgyachting.nl
www.elburgyachting.nl
+31 525 68 68 68

ELBURG YACHTING®

international yachtbrokers

Gegevens worden geacht juist te zijn, doch worden niet gegarandeerd. - Whilst every care has been taken in the preparation of the particulars, their correctness is not guarenteed.

J.P. Broekhovenstraat 37
8081 HB Elburg
The Netherlands

Reference number
B26024442

info@elburgyachting.nl
www.elburgyachting.nl
+31 525 68 68 68

ELBURG YACHTING®

international yachtbrokers

Gegevens worden geacht juist te zijn, doch worden niet gegarandeerd. - Whilst every care has been taken in the preparation of the particulars, their correctness is not guarenteed.

J.P. Broekhovenstraat 37
8081 HB Elburg
The Netherlands

Reference number
B26024442

info@elburgyachting.nl
www.elburgyachting.nl
+31 525 68 68 68

ELBURG YACHTING®

international yachtbrokers

Gegevens worden geacht juist te zijn, doch worden niet gegarandeerd. - Whilst every care has been taken in the preparation of the particulars, their correctness is not guarenteed.

J.P. Broekhovenstraat 37
8081 HB Elburg
The Netherlands

Reference number
B26024442

info@elburgyachting.nl
www.elburgyachting.nl
+31 525 68 68 68

ELBURG YACHTING®

international yachtbrokers

Gegevens worden geacht juist te zijn, doch worden niet gegarandeerd. - Whilst every care has been taken in the preparation of the particulars, their correctness is not guarenteed.

J.P. Broekhovenstraat 37
8081 HB Elburg
The Netherlands

Reference number
B26024442

info@elburgyachting.nl
www.elburgyachting.nl
+31 525 68 68 68

ELBURG YACHTING®

international yachtbrokers

Gegevens worden geacht juist te zijn, doch worden niet gegarandeerd. - Whilst every care has been taken in the preparation of the particulars, their correctness is not guarenteed.

J.P. Broekhovenstraat 37
8081 HB Elburg
The Netherlands

Reference number
B26024442

info@elburgyachting.nl
www.elburgyachting.nl
+31 525 68 68 68

ELBURG YACHTING®

international yachtbrokers

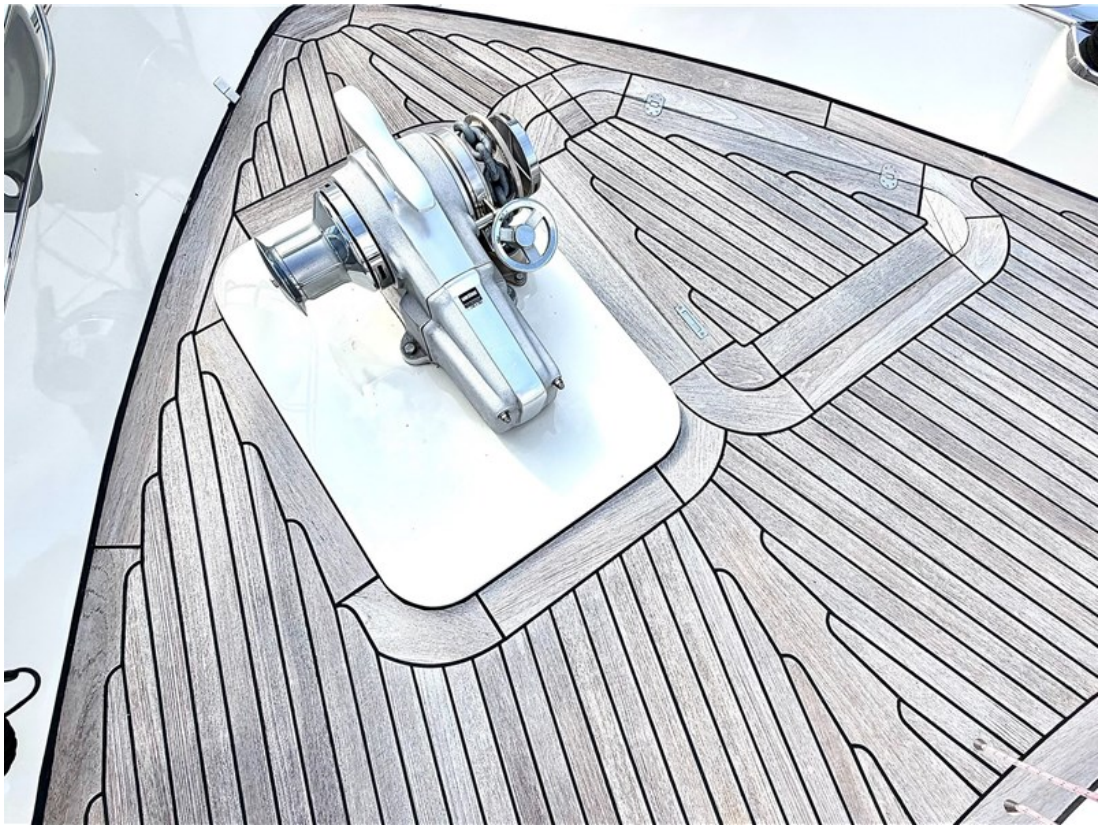

Gegevens worden geacht juist te zijn, doch worden niet gegarandeerd. - Whilst every care has been taken in the preparation of the particulars, their correctness is not guarenteed.

J.P. Broekhovenstraat 37
8081 HB Elburg
The Netherlands

Reference number
B26024442

info@elburgyachting.nl
www.elburgyachting.nl
+31 525 68 68 68

ELBURG YACHTING®

international yachtbrokers

Gegevens worden geacht juist te zijn, doch worden niet gegarandeerd. - Whilst every care has been taken in the preparation of the particulars, their correctness is not guarenteed.

J.P. Broekhovenstraat 37
8081 HB Elburg
The Netherlands

Reference number
B26024442

info@elburgyachting.nl
www.elburgyachting.nl
+31 525 68 68 68

ELBURG YACHTING®

international yachtbrokers

Gegevens worden geacht juist te zijn, doch worden niet gegarandeerd. - Whilst every care has been taken in the preparation of the particulars, their correctness is not guarenteed.

J.P. Broekhovenstraat 37
8081 HB Elburg
The Netherlands

Reference number
B26024442

info@elburgyachting.nl
www.elburgyachting.nl
+31 525 68 68 68

ELBURG YACHTING®

international yachtbrokers

Gegevens worden geacht juist te zijn, doch worden niet gegarandeerd. - Whilst every care has been taken in the preparation of the particulars, their correctness is not guarenteed.

J.P. Broekhovenstraat 37
8081 HB Elburg
The Netherlands

Reference number
B26024442

info@elburgyachting.nl
www.elburgyachting.nl
+31 525 68 68 68

ELBURG YACHTING®

international yachtbrokers

Gegevens worden geacht juist te zijn, doch worden niet gegarandeerd. - Whilst every care has been taken in the preparation of the particulars, their correctness is not guarenteed.

J.P. Broekhovenstraat 37
8081 HB Elburg
The Netherlands

Reference number
B26024442

info@elburgyachting.nl
www.elburgyachting.nl
+31 525 68 68 68

ELBURG YACHTING®

international yachtbrokers

Gegevens worden geacht juist te zijn, doch worden niet gegarandeerd. - Whilst every care has been taken in the preparation of the particulars, their correctness is not guarenteed.

J.P. Broekhovenstraat 37
8081 HB Elburg
The Netherlands

Reference number
B26024442

info@elburgyachting.nl
www.elburgyachting.nl
+31 525 68 68 68

ELBURG YACHTING®

international yachtbrokers

Gegevens worden geacht juist te zijn, doch worden niet gegarandeerd. - Whilst every care has been taken in the preparation of the particulars, their correctness is not guarenteed.

J.P. Broekhovenstraat 37
8081 HB Elburg
The Netherlands

Reference number
B26024442

info@elburgyachting.nl
www.elburgyachting.nl
+31 525 68 68 68

ELBURG YACHTING®

international yachtbrokers

Gegevens worden geacht juist te zijn, doch worden niet gegarandeerd. - Whilst every care has been taken in the preparation of the particulars, their correctness is not guarenteed.

J.P. Broekhovenstraat 37
8081 HB Elburg
The Netherlands

Reference number
B26024442

info@elburgyachting.nl
www.elburgyachting.nl
+31 525 68 68 68